# BON PERGOLA



CUSTOM SIZE PRE FABRICATED SIZE SCREEN SMART SYSTEM AND MORE

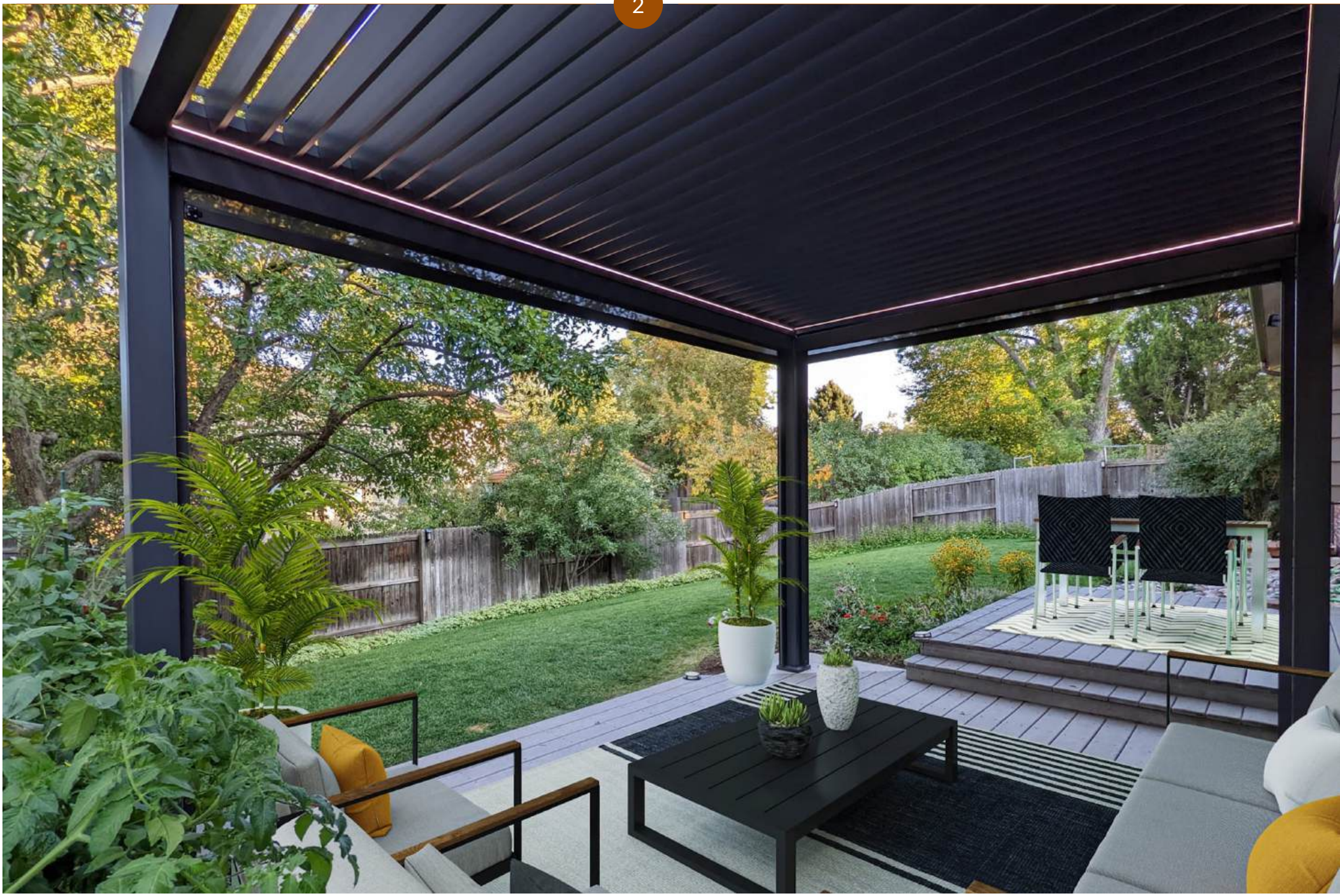

# Table of Content





1. Villa Pergola P4-5
2. Villa Pergola 2.0 P6-7
3. Custom Pergola P8-9
4. Grand Retractable Pergola P10-11
5. Awning Pergola P12-13






1. Screen P15
2. Sliding glass P16
3. Slate Fencing P17
4. Shutter P18
5. Extanded post P19
6. Smart System P20-21






1. LMDS P22-23
2. ESF P24-25






1. Cypress P26-27
2. Orchard P28-29
3. Woodbury P30-31

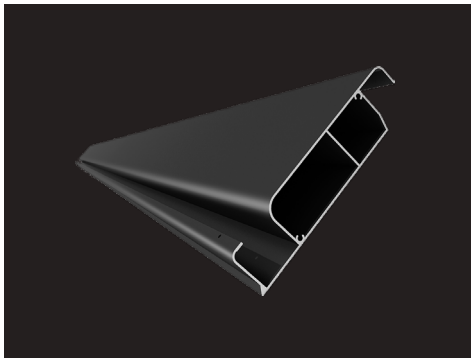

Construction Grade materials



Hidden Drainage System

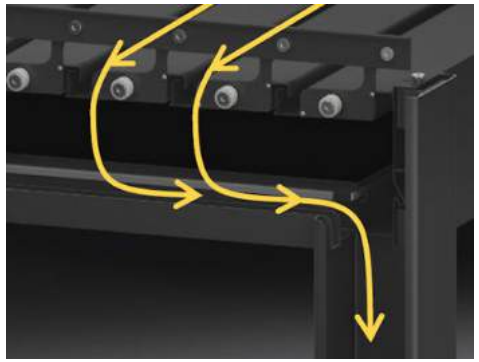

Hidden Drainage System



High Flow Water Gutter



Screw Concealed Design



4-3/4” Heavy Post

# Villa Pergola

- 8’1” Bottom Clearance
- 8’8” Overaall
- 13ft lenght span without center post
- 15-30PDF snow rating when closed
- 80-160 mph wind resistance rating when closed





# Villa Pergola 2.0

- Strongest mid-duty system on the market
- 2023 Global Innovation Silver Award
- 2022 Most Valuable Product Silver Award
- 8’1” Bottom Clearance
- 8’9” ft overall
- 13 ft length span without center post
- 20-30 PSF snow rating when closed
- 100-165 mph wind resistance rating when closed


8" True Engineered Aluminum Beam

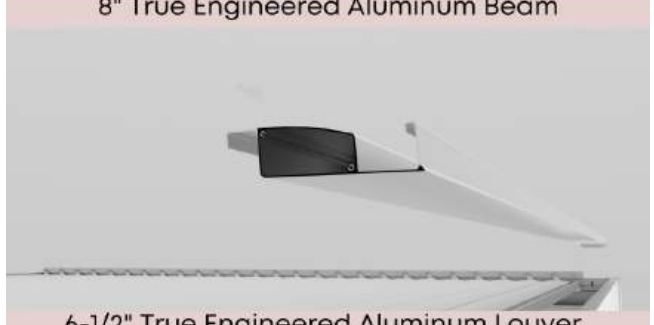
6-1/2" True Engineered Aluminum Louver

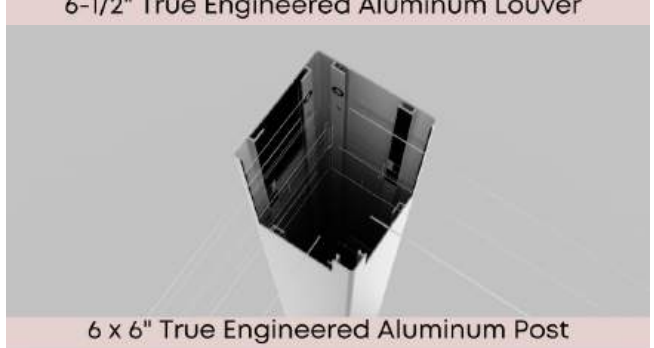
6 x 6" True Engineered Aluminum Post


Hurricane Proof Robust Footing Structure



# Weatherproof Pergola

- Highest quality pergola material on market
- 9’ Bottom Clearance
- 9’10” ft overall
- 19 ft length span without center post
- 25-40 PSF snow rating when closed
- 120-170 mph wind resistance rating when closed









- 9 ft Bottom Clearance
- 10’2” overall
- 19’ length span without center post
- 25-30 PSF snow rating when closed
- 120-170 mph wind resistance rating when closed
- Designed in California



# Grand Retractable Pergola

Motorized retractable aluminum frame pergola with retractable function and smart adjusting motor that can retract opened and closed to allow just the right amount of sunshine to come in. Perfect for gathering without worry of sun or rain. Unlike real wood the finish will never have to be stained or treated.



# Awning Pergola





This unique structure offers superior protection from the sun and rain, all while allowing you to enjoy an unobstructed view of the sky at any time.

Choose components including the size, color, canopies, and whether you need an attached or freestanding pergola.

- Sun Protection - UV protection
- Ventilation - Open & Close Louvers At Any Time
- Rain Protection - Water Drainage Included
- Completely Open and Close
- Wind protection - Wind resistance rating up to 60 mph





# Accessories



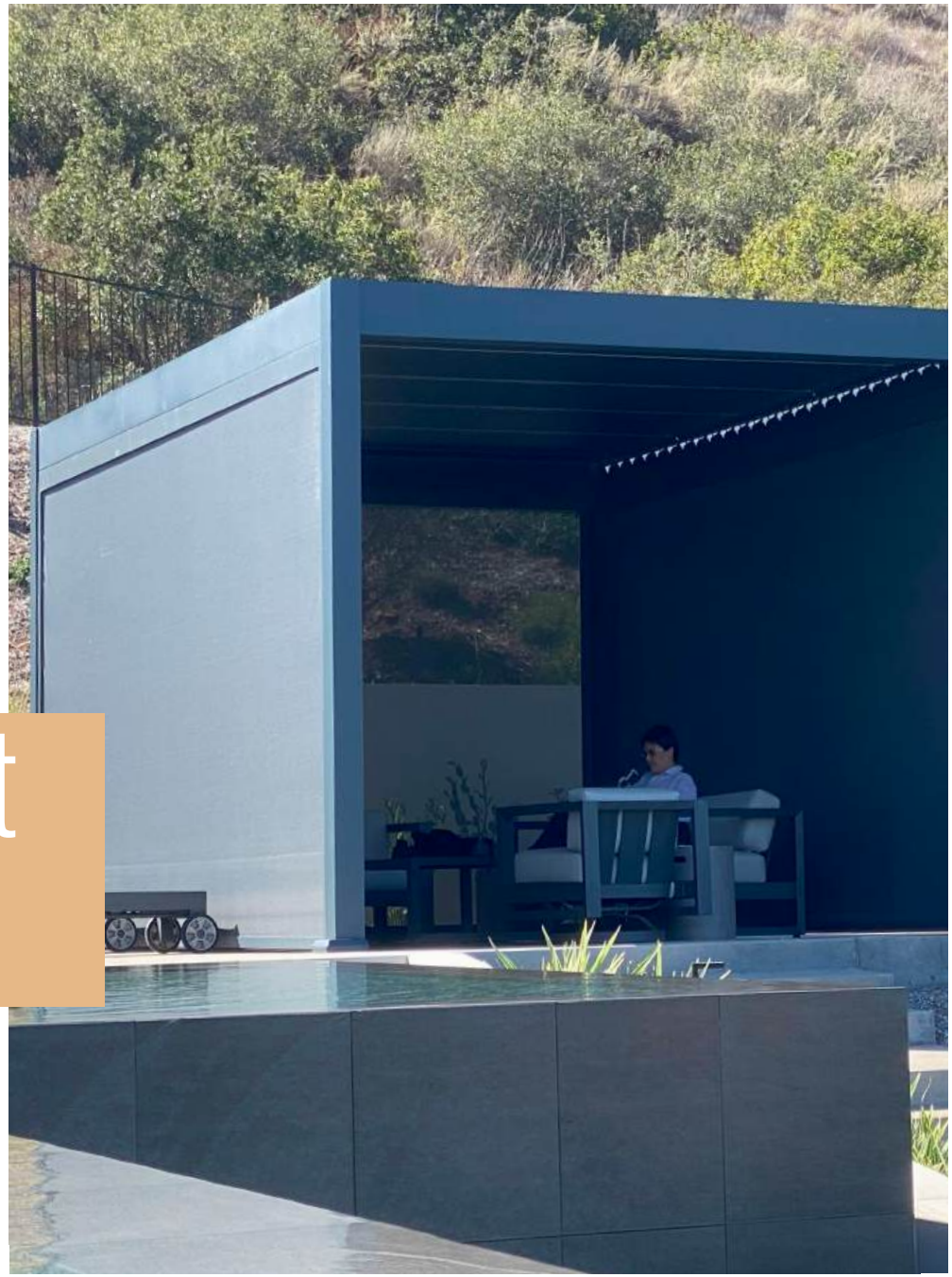

# Wind/Sun Resistant Sunscreen

- 60 MPH Wind Resistant Rate
- Smooth Tec to ensure it works smoothly
- 100% Full Aluminum Structure
- Free Shipping if purchased with our pergola

# Sliding Doors

- Wind/rain blocking
- Top/bottom premium sliding system
- Weatherproofing thick protective frame
- 100% aluminum—never rusts
- Fits perfectly with Villa Pergola



Framed glass sliding door available for Villa Pergola



Frameless glass sliding door available for Weatherproof Pergola



# Premium Slate Aluminium Fencing

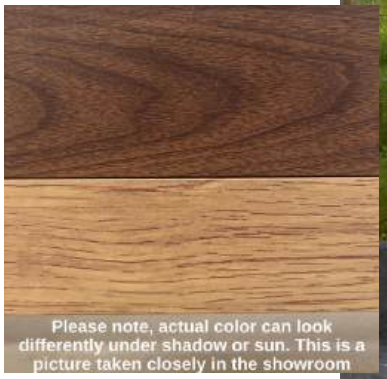




- Wood Grain Outlook
- 100% Aluminum for never rust
- 10/13ft Span without joint

# Premium Sliding Shutter





- Full Privacy Protection
- 100% Full Aluminum
- Smooth Gliding Wheel on Top/Bottom

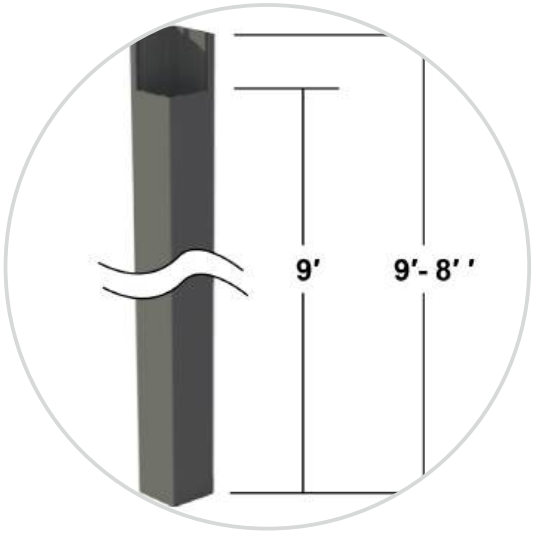


## 9ft Extended Post - Villa Pergola

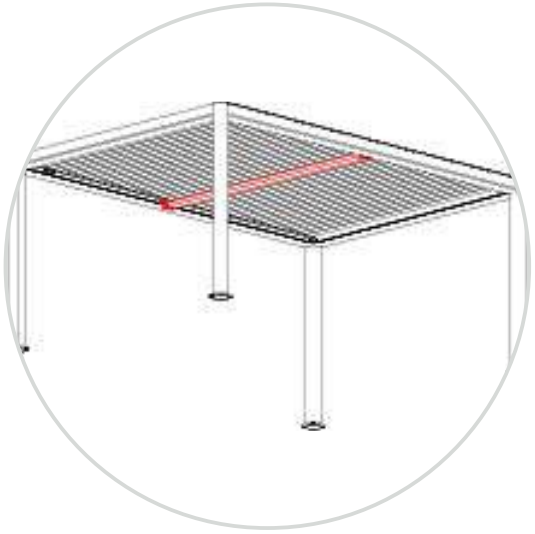

## Fan Beam

# Smart System









## Bond Bridge Smart System

1. Control your Pergolas and Screens on your phone
2. Smart home functionality without breaking the bank
3. Can be channel and learn with most RF device
4. 60FT range

## Bond Breeze Pro (Smart Sensor)

1. Automatically control your outdoor louvers / screens / heater / lighting based on wind speed, rain, or sunlight intensity measurements.
2. Require the Bond Bridge Pro as a HUB
3. Real time In-App weather data, signal strength and battery status (every 10 seconds)
4. Can be linked to control multiple screens, louvers, and shutters via the Bond Home app
5. Power options: Solar powered, 2xAA Batteries, and 12VDC when operating under 35ºF (optional)
6. IP67 rated



## BON 110V SS Smart Heaters

1. Full Stainless Steel 304
2. Smart RF - Connect With Bond Bridge
3. IPX25 Waterproof Rating
4. Power 110V, 60Hz, 1500W
5. SGS/GS/CE approved for safety



## Rain Sensor for Weatherproof Pergola



## Rain Sensor for Villa Pergola





# YODOKO Premium Outdoor Large Shed LMDS

- Known As Best Shed In The Industry
- 20 Years Structure Warranty
- Made in Japan. Yodogawa Steel for 100+ Years in History
- Heat Reduction Technology For Storage
- Made With Material Used For Airport/Stadium
- Impact Tested on Sides: 165LB/10ft
- Wind Resistant Rate: 76MPH
- Snow Resistant Test: 25LB/SQFT
- Salt Water Spray Test: 500 hours
- Quality Lock For Safety

- LMDS-2215 series: W7.25 × H6.75 × D4.95', 533LB
- LMDS-2222 series: W7.25' x H6.75' x D7.25', 671LB
- LMDS-2229 series: W7.25' × H6.75' × D9.54', 711LB
- LMDS-2922 series (wider double slider door): W9.54' × H6.75' × D7.25'





- ESF-1807A series: W5.95’ × H6.25’ × D2.54’, 263LB

# YODOKO Premium Outdoor Small Shed ESF

- Known As Best Shed In The Industry
- 20 Years Structure Warranty
- Made in Japan. Yodogawa Steel for 100+ Years in History
- Heat Reduction Technology For Storage
- Made With Material Used For Airport/Stadium
- Impact Tested on Sides: 165LB/10ft
- Wind Resistant Rate: 76MPH
- Snow Resistant Test: 25LB/SQFT
- Salt Water Spray Test: 500 hours
- Quality Lock For Safety









# Cypress Collection Fire Pit + Furniture



- 15mm Thick Teak Wood
- Sintered stone with natural textures
- Full Aluminum Body With Powder Coating
- Wind Guard Fire Glass + SS304 Fire Bowl
- Max 30,000 BTU Output





# Orchard Collection Fire Pit + Furniture



- Sintered stone with natural textures
- Full Aluminum Body With Powder Coating
- Wind Guard Fire Glass + SS304 Fire Bowl
- Max 30,000 BTU Output





- 15mm Thick Teak Wood
- Sintered stone with natural textures
- Full Aluminum Body With Powder Coating
- Wind Guard Fire Glass + SS304 Fire Bowl
- Twin Burner Design
- Max 60,000 BTU Output





# Woodbury Collection
# Fire Pit + Furniture

# Contact Us.

- Sales Email: Connect@bonpergola.com
- Customer Service Email: Hello@bonpergola.com
- Phone: 949-716-3678



Showroom:
Monday-Friday 10am - 5pm
22600A Lambert Street, Suite 708
Lake Forest, CA 92630
(949) 716-3678

Warehouse:
8945 Dice Rd
Santa Fe Springs, CA, 90670
(949) 716-3678

625 Rahway Ave.
Union, NJ, 07083
(949) 716-3678